ITEM NO.	PART NUMBER	DESCRIPTION	QTY.
1	3-133/00	LEVER HANDLE, HEX MODERN, 501 SERIES	2
1.1	10921/00	ESCUTCHEON, TRANSITIONAL	1
1.2	10922/00	HUB, FOR HEX TRANSITIONAL	1
1.3	11036/00	HANDLE LEVER, CONTEMPORARY 16PT	1
1.4	92163	SET SCREW, CONE PT 8-32 X 1/8"L	2
2	3-144/00	SPOUT, DECK TUB,500/501 SERIES	1
2.1	P27015/00	K5170 DECK SPOUT	1
2.2	10584	RUBBER SEAL, AERATOR GASKET 1.0"OD X .753"ID X .125"THK	1
2.3	10582	AERATOR, PERL, M28 TUB FILLER CLASS D 41.2007.000	1
2.4	10583/00	AERATOR HOUSING, M28 41.2007.000	1
2.5	92191	M6X1.0 -6MM L	1

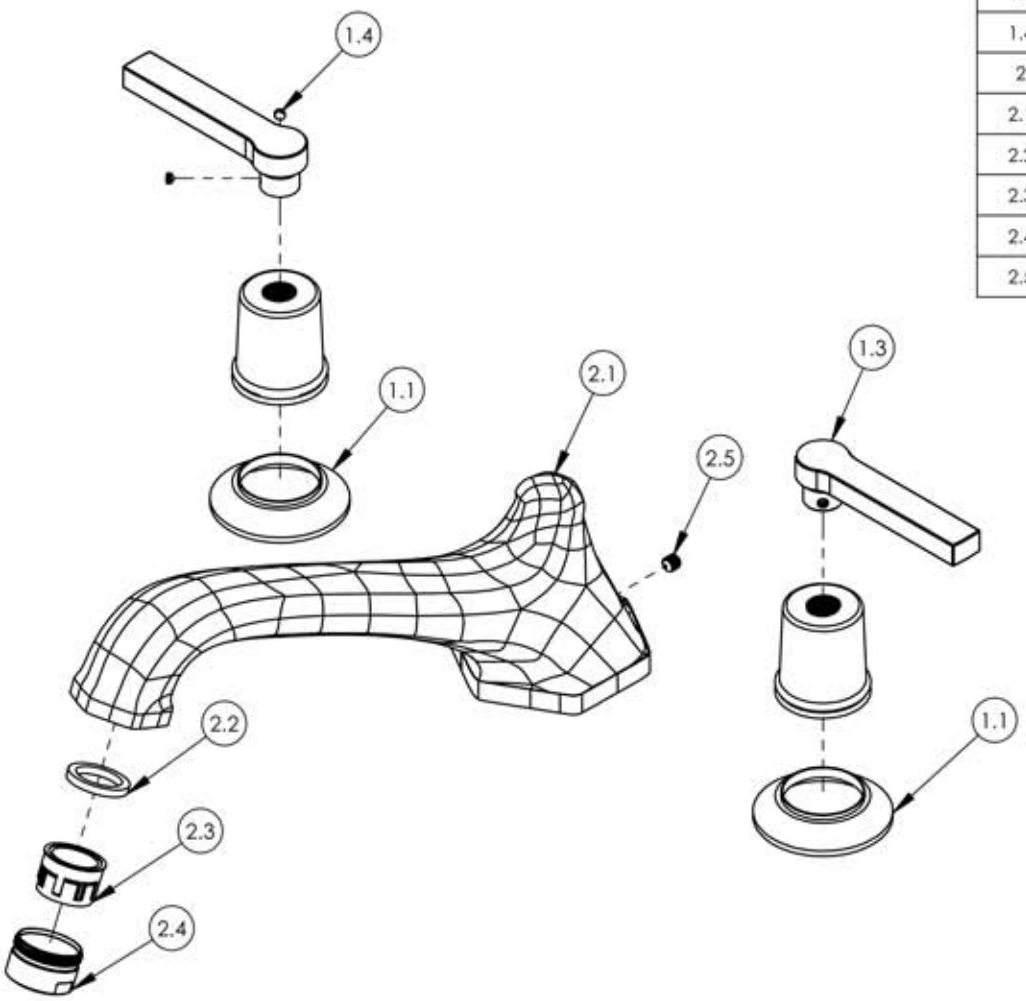

ZONE	REV.	DESCRIPTION	DATE	APPROVED
		REVISIONS		

1261 LOGAN AVENUE
COSTA MESA, CALIFORNIA 92626

PHONE: 714.361.4800
FAX: 714.617.3120

PHYLRICH®

Defining Luxury Since 1959

PROPRIETARY AND CONFIDENTIAL

THE INFORMATION CONTAINED IN THIS DRAWING IS THE SOLE PROPERTY OF RSS MANUFACTURING. ANY REPRODUCTION IN PART OR AS A WHOLE WITHOUT THE WRITTEN PERMISSION OF RSS MANUFACTURING IS PROHIBITED.

-	-
-	-
-	-
NEXT ASSY	USED ON
APPLICATION	
MATERIAL	
FINISH	

DO NOT SCALE DRAWING

INTERPRET GEOMETRIC DIMENSIONING & TOLERANCING IN ACCORDANCE WITH ASME Y14.5-2009 & ASME Y14.41-2003 STANDARDS. UNLESS OTHERWISE SPECIFIED, DIMENSIONS ARE IN INCHES. TOLERANCES ARE:

FRACTIONS	DECIMALS	ANGULAR
±1/64"	X.X: ±.1 X.XX: ±.01 X.XXX: ±.005	±.5°

	NAME	DATE
DRAWN	FME	11/19/2015
CHECKED	LLO	

DECK TUB SET TRIM, LEVER HANDLE, HEX MODERN SERIES

SIZE	ASM/PRT NO.	REV
A	501-41/00	-

SCALE: 1:3 | WEIGHT: lbs. | SHEET 1 OF 2

5 4 3 2 1